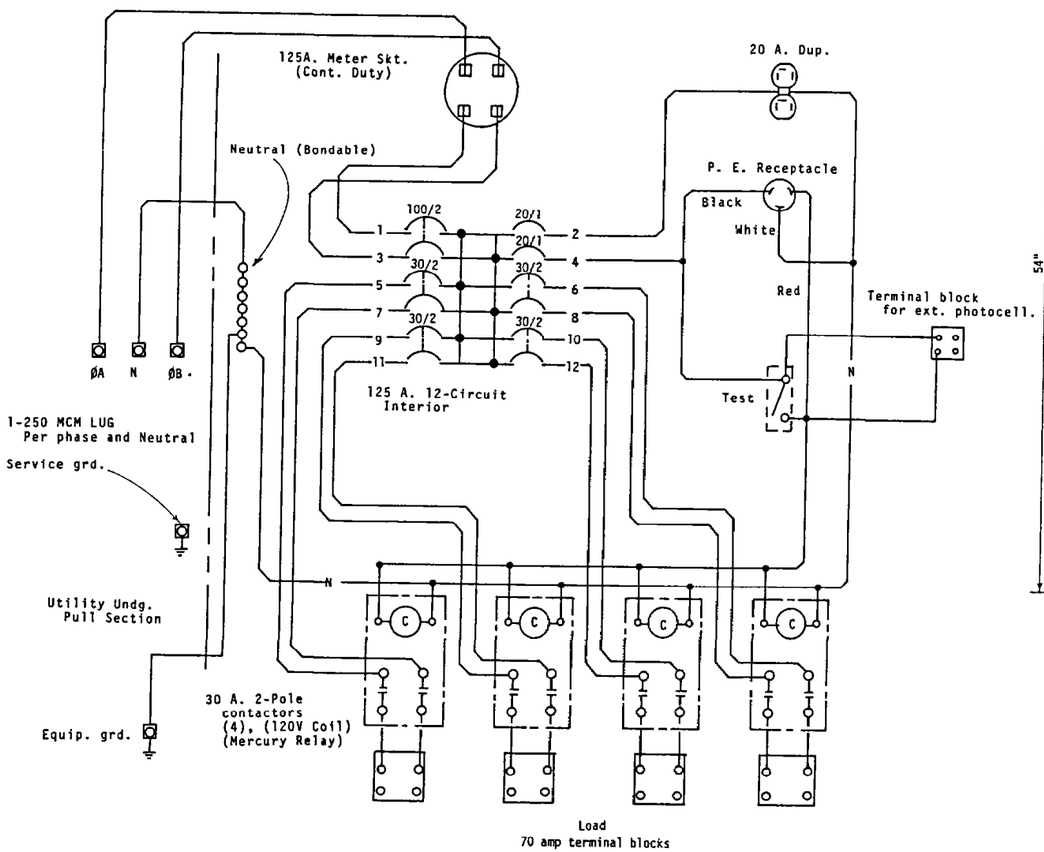

WIRING DIAGRAM

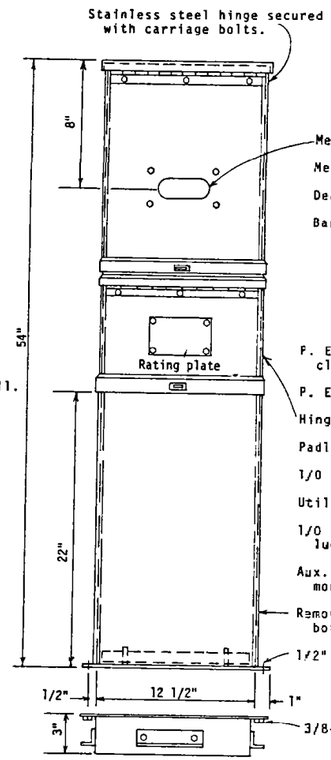

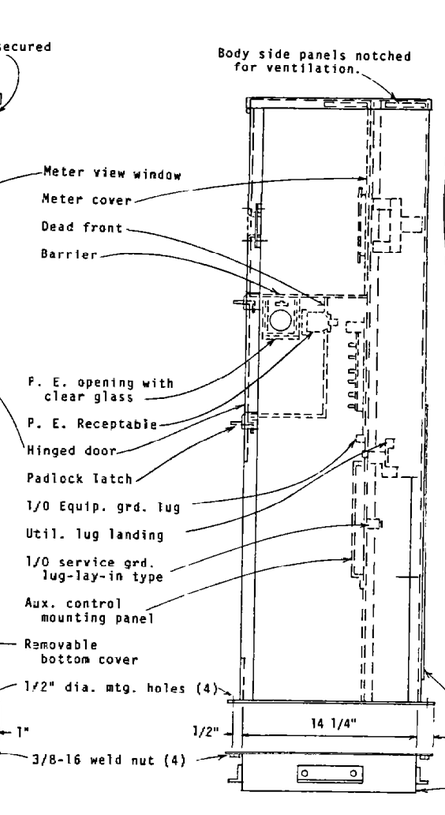

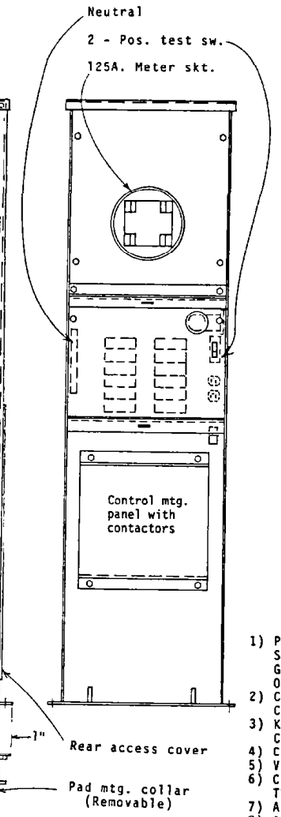

CONTROLLER PEDESTAL

MYERS # MEUG-M100-OPK

(OR APPROVED EQUAL)

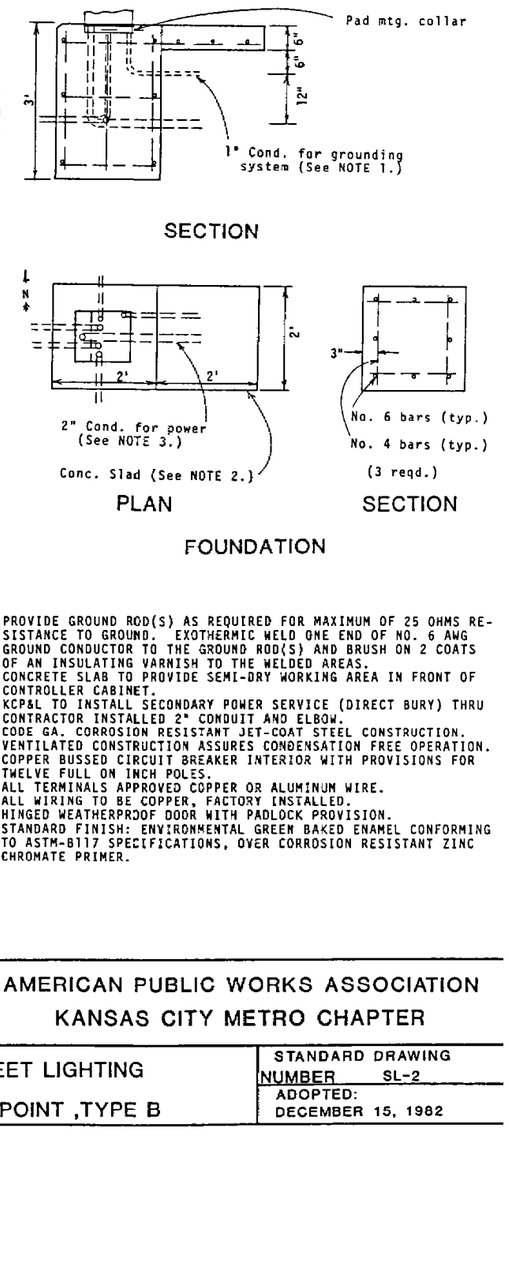

1) PROVIDE GROUND ROD(S) AS REQUIRED FOR MAXIMUM OF 25 OHMS RESISTANCE TO GROUND. EXOTHERMIC WELD ONE END OF NO. 6 AWG GROUND CONDUCTOR TO THE GROUND ROD(S) AND BRUSH ON 2 COATS OF AN INSULATING VARNISH TO THE WELDED AREAS.
2) CONCRETE SLAB TO PROVIDE SEMI-DRY WORKING AREA IN FRONT OF CONTROLLER CABINET.
3) KCP&L TO INSTALL SECONDARY POWER SERVICE (DIRECT BURY) THRU CONTRACTOR INSTALLED 2" CONDUIT AND ELBOW.
4) CODE GA. CORROSION RESISTANT JET-COAT STEEL CONSTRUCTION.
5) VENTILATED CONSTRUCTION ASSURES CONDENSATION FREE OPERATION.
6) COPPER BUSSED CIRCUIT BREAKER INTERIOR WITH PROVISIONS FOR TWELVE FULL ON INCH POLES.
7) ALL TERMINALS APPROVED COPPER OR ALUMINUM WIRE.
8) ALL WIRING TO BE COPPER, FACTORY INSTALLED.
9) HINGED WEATHERPROOF DOOR WITH PADLOCK PROVISION.
10) STANDARD FINISH: ENVIRONMENTAL GREEN BAKED ENAMEL CONFORMING TO ASTM-B117 SPECIFICATIONS, OVER CORROSION RESISTANT ZINC CHROMATE PRIMER.

AMERICAN PUBLIC WORKS ASSOCIATION
KANSAS CITY METRO CHAPTER

STREET LIGHTING FEED POINT ,TYPE B	STANDARD DRAWING NUMBER SL-2 ADOPTED: DECEMBER 15, 1982